1

DPZ

X5

ZGLS-A

M 5x60

X5

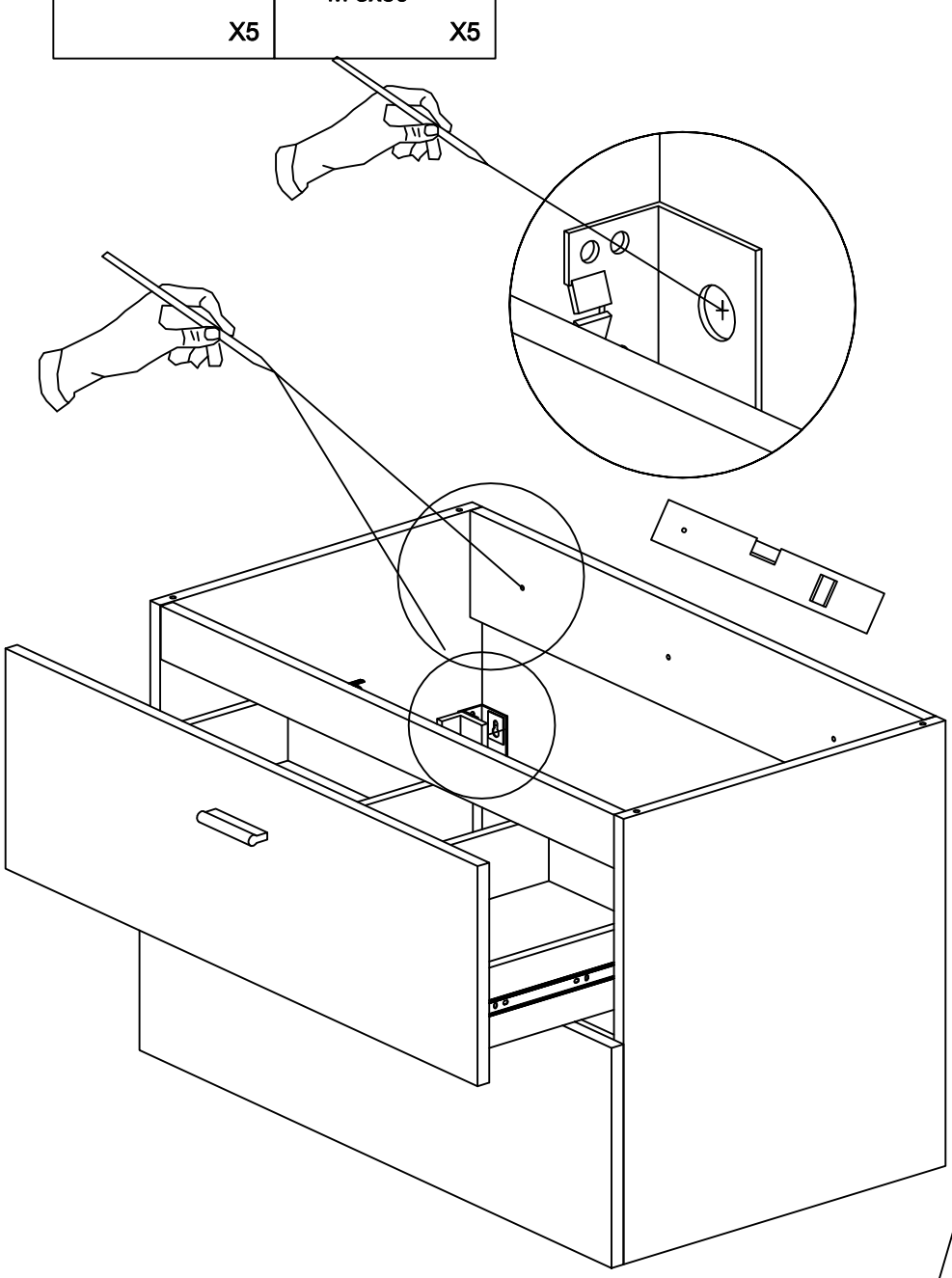

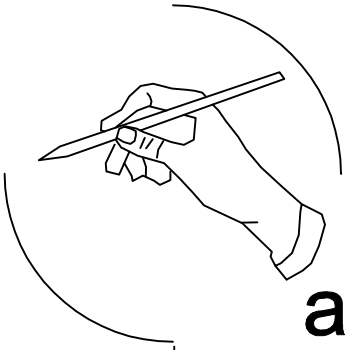

a

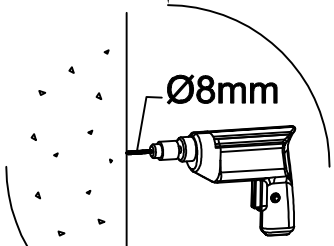


b

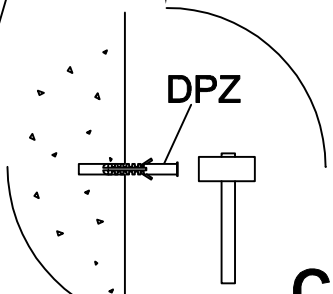


c

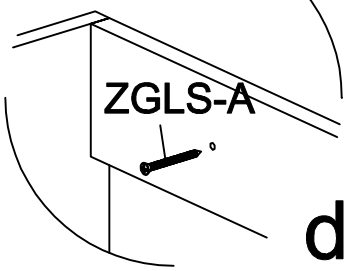


d

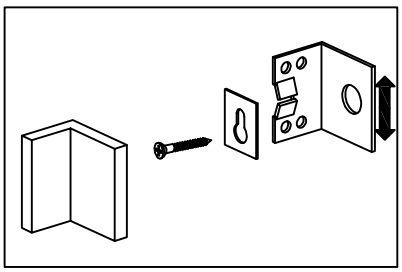

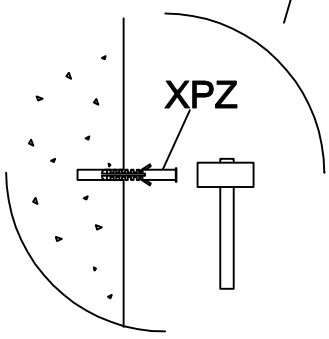

2

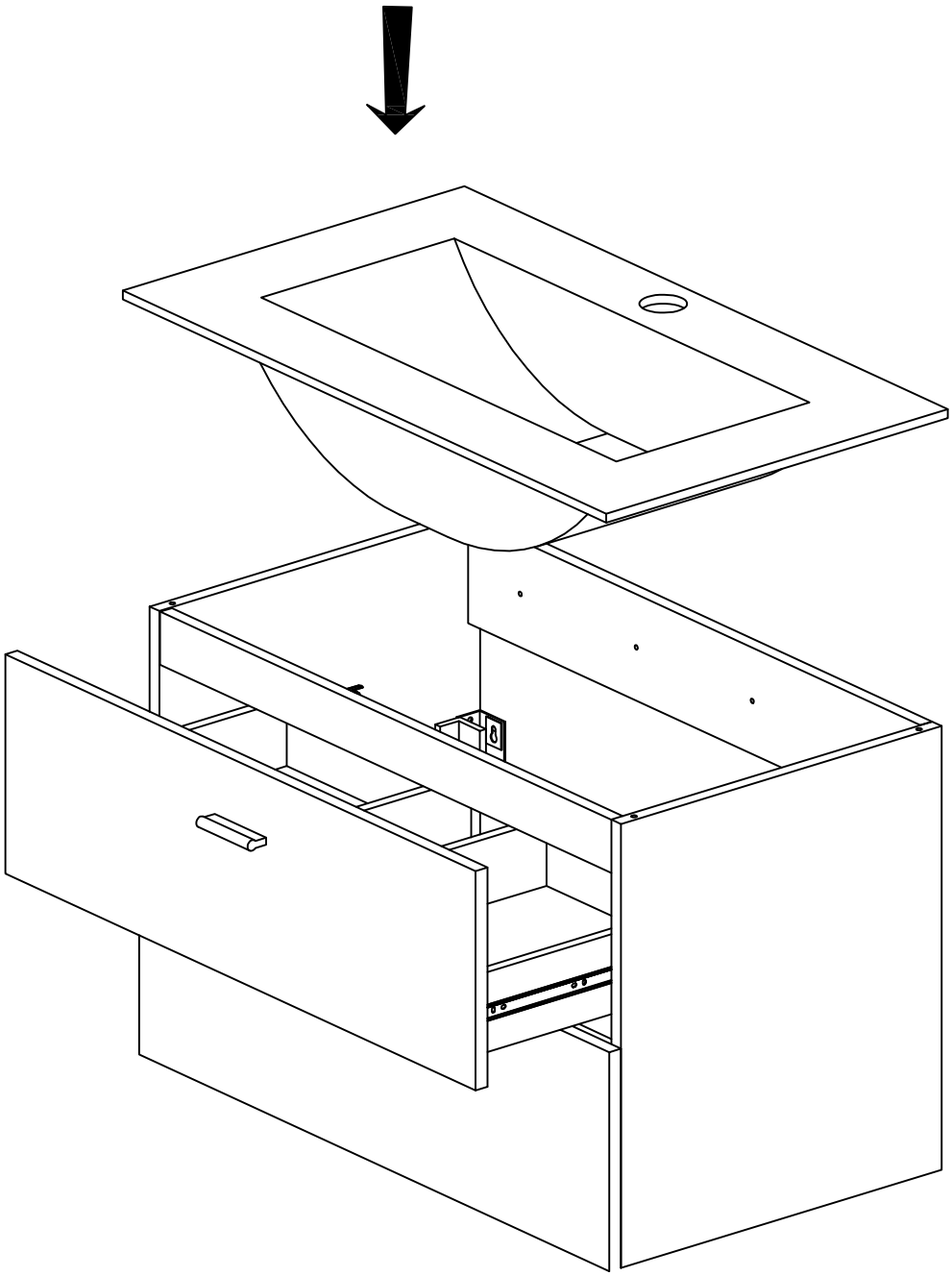

3

| XPZ 6*30 | ZGLS |
| --- | --- |
|  | 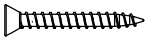 |
| X2 | M 4x40 |
| | X2 |

